HFHPR

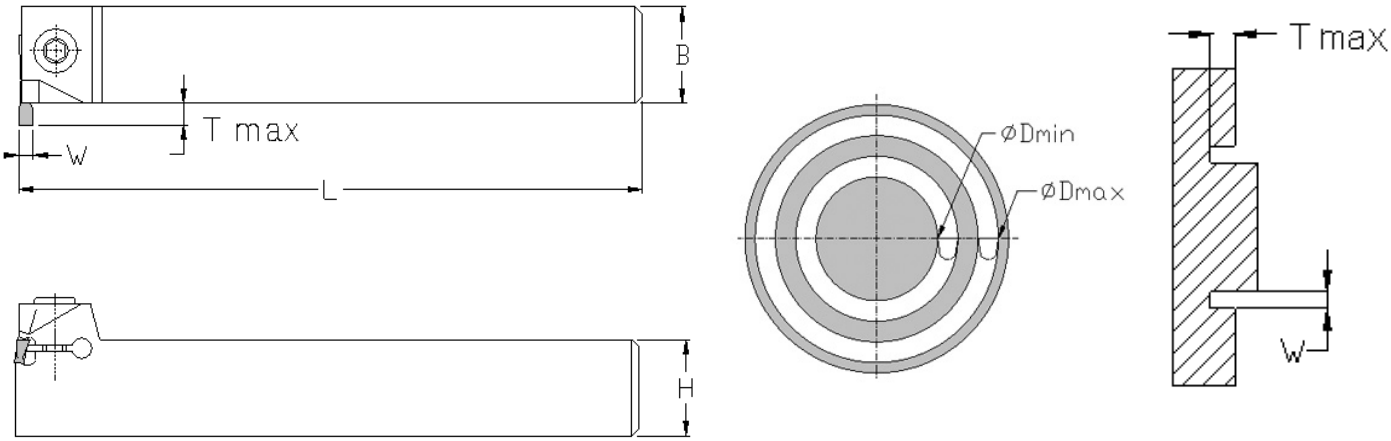

right hand shown

ISCAR 端面淺槽切槽刀架 / (ISCAR EXTERNAL FACE GROOVING HOLDERS)

產品規格 Model No.	尺寸 Dimensions				ØDmin.	ØDmax.	刀片 Insert	Screw	Wrench
Right-hand/Left-hand	HxB	W	L	Tmax.					
HFHPR-2020K-5L	20x20	3~6	125	5	18	60	HFPR3003	P-CS660-M	P-LW050-M
					15	90	HFPR4004		
					11	300	HFPR5004		
					8	∞	HFPR6004		
HFHPR-2525M-5L	25x25	3~6	150	5	18	60	HFPR3003		
					15	90	HFPR4004		
					11	300	HFPR5004		
					8	∞	HFPR6004		